SM5702A-1000A0

电机尺寸
DIMENSIONS:
(UNIT=MM)

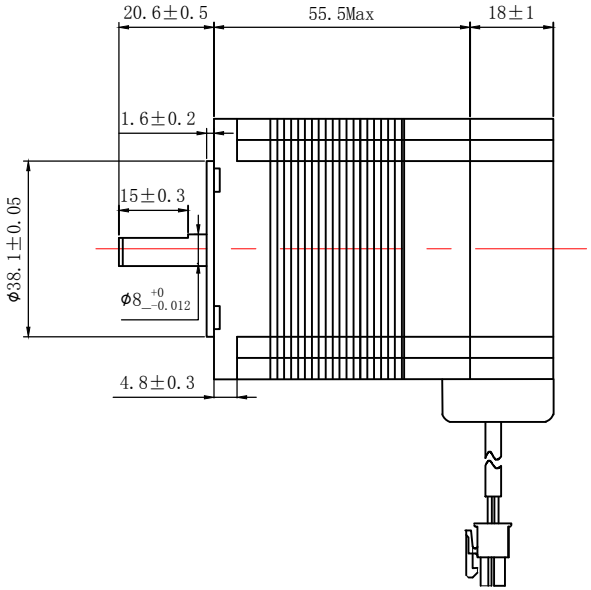

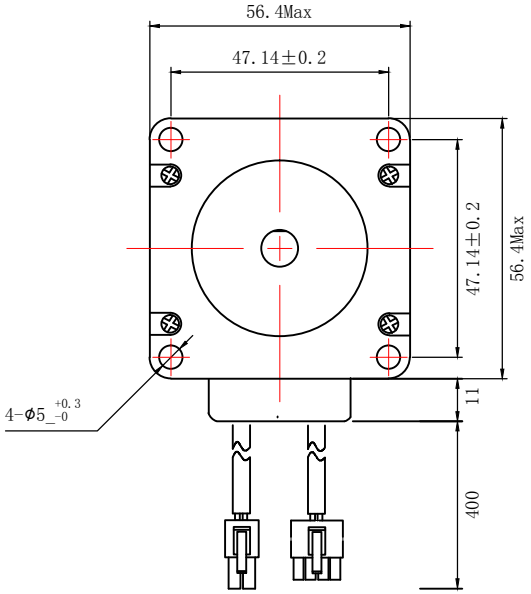

说明
NOTES:

1. PLEASE DON'T HOLD MOTOR BY LEAD WIRES.
2. PLEASE DON'T PLUG IN/OUT THE MOTOR CONNECTOR WHILE POWER ON.
3. PLEASE DON'T DROP, HURL OR DUMP MOTOR AGAINST HARD MATERIAL MALFUNCTION MAY NOT BE OBSERVED AT EARLY STAGE AFTER SUCH SHOCKS, BUT FOUND LATER. THE MISHANDLING VOIDS OUR WARRANTY.
4. DONGGUAN ICAN-TECH WILL NOT BE RESPONSIBLE FOR ANY PATENT DISPUTE OR PROBLEM CAUSED BY ACTUAL APPLICATIONS

驱动连接方式
CONNECTION MODE:

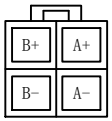

A+	A−	B+	B−
红	白	黑	黄

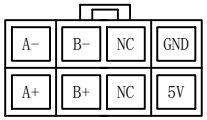

A+	A−	B+	B−	5V	GND
黄	黄白	蓝	蓝黑	红	黑

电机参数/ELECTRICAL PARAMETER	
电机型号 MANUFACTURER MODEL	SM5702A-1000A0
适配步进电机驱动器 MATCHED MOTOR DRIVE	SS57
步距角 STEP ANGLE (°/STEP)	1.8
电机电压 RATED VOLTAGE (V)	1.68
电机电流 RATED CURRENT (A/PHASE)	4.2
电机电阻 RESISTANCE (Ω±15%/PHASE)	0.4
电机电感 INDUCTANCE (mH±20%/PHASE)	1.4
电机力矩 HOLDING TORQUE (N.M)	1.2
编码器分辨率 ENCODER RES	1000

轴径配置/SHAFT DESIGH

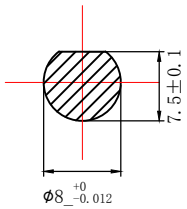

制图 DESIGNED	检图 CHECKED	校准 APPROVED	日期 DATE	比例 SCALE
HUANGTING	MAHUALING		2016/03/01	1:1.7
SM5702A-1000A0		东莞市一能机电技术有限公司 DONGGUAN ICAN TECHNOLOGY CO.,LTD		
闭环步进电机 STEPPER SERVO MOTOR				版本 EDITION V2.0